Radio

⇒ Chorus
⇒ Concert
⇒ Symphony
From 2002 m. y.

Main fuse

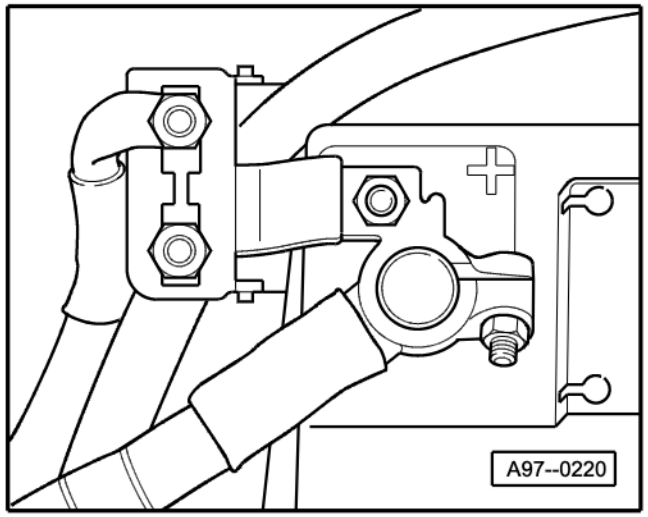

♦ on the Battery

Protected by copyright. Copying for private or commercial purposes, in part or in whole, is not permitted unless authorised by AUDI AG. AUDI AG does not guarantee or accept any liability with respect to the correctness of information in this document. Copyright by AUDI AG.

Fuse holder

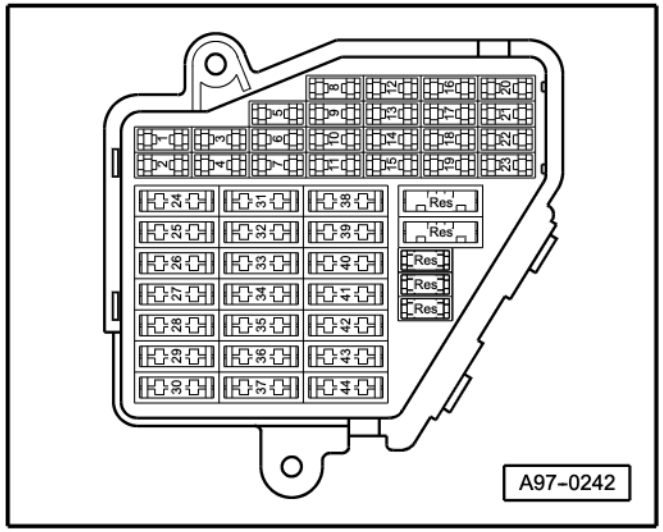

- Instrument panel driver side

Fuse Colors
30 A - Green
25 A - Withe
20 A - Yellow
15 A - Blue
10 A - Red
7,5 A - Brown
5 A - Beige

Note:

- *Fuse in fusebox from 23 onwards are numbered 223 onwards in Current Flow Diagram.*

Protected by copyright. Copying for private or commercial purposes, in part or in whole, is not permitted unless authorised by AUDI AG. AUDI AG does not guarantee or accept any liability with respect to the correctness of information in this document. Copyright by AUDI AG.

4-Pin Relay Carrier with threaded connection

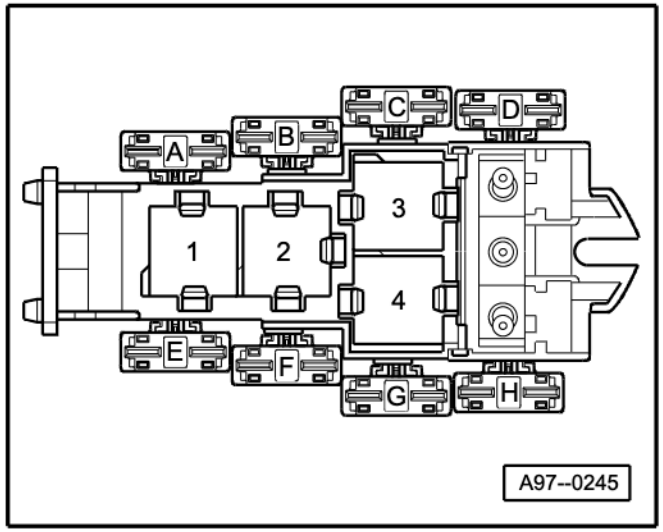

- Instrument panel driver side

Protected by copyright. Copying for private or commercial purposes, in part or in whole, is not permitted unless authorised by AUDI AG. AUDI AG does not guarantee or accept any liability with respect to the correctness of information in this document. Copyright by AUDI AG.

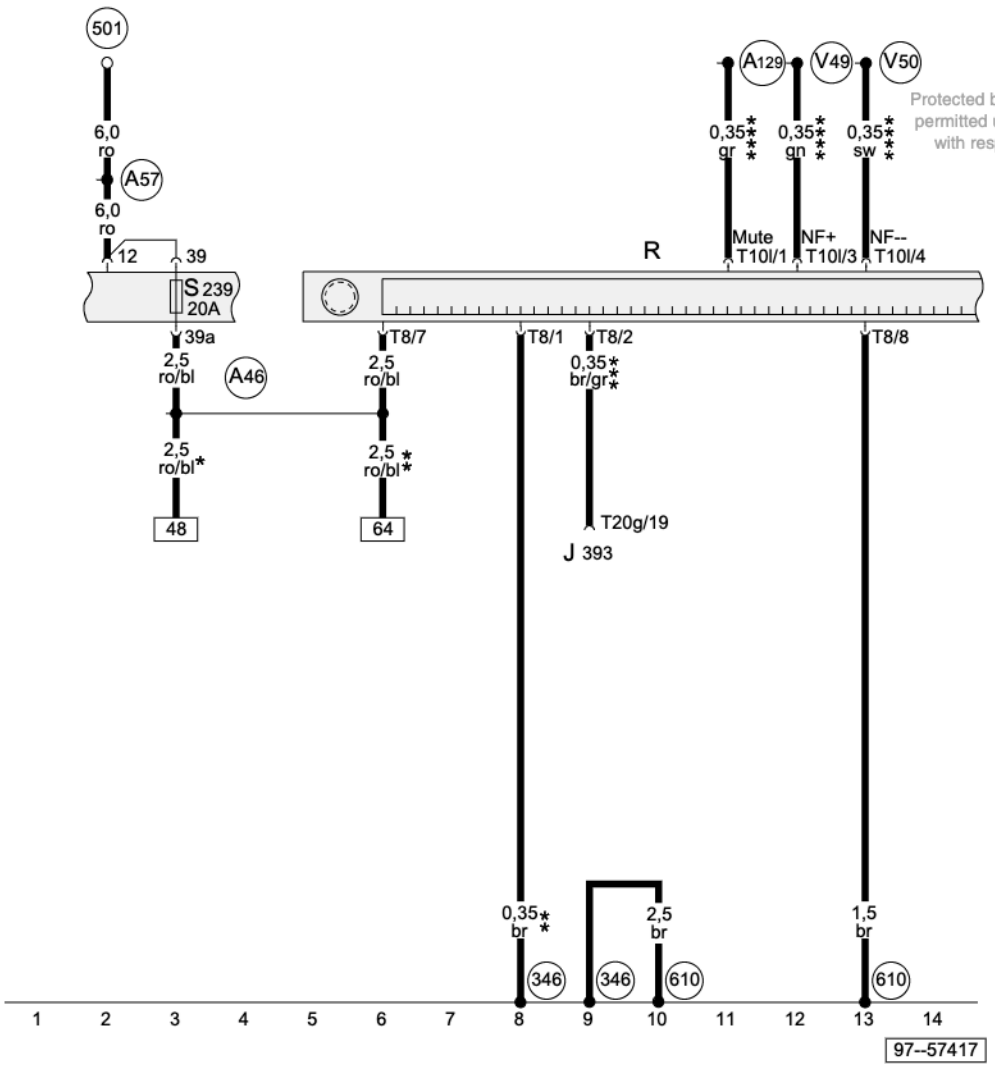

Voltage Supply

J393	Central control module for comfort system
R	Radio
S239	Fuse in fuse holder
T8	8-Pin Connector, black, radio connector III
T10l	10-Pin Connector, red, radio connector IV
T20g	20-Pin Connector, red, on central control module for comfort system (used to be Connector 4)
346	Ground connection (Audio), in instrument panel wiring harness
501	Threaded connection -2- (30), on the relay plate
610	Ground connection (Audio) (under center console, front)
A46	Plus connection (30-from radio), in instrument panel wiring harness
A57	Plus connection -3- (30), in instrument panel wiring harness
A129	Connection (mute), in instrument panel wiring harness
V49	Low Frequency + Connection (in communication wiring harness)
V50	Low Frequency - Connection (in communication wiring harness)
*	with Amplified Speaker only
**	with Bose Speaker only
***	with alarm system only
****	with Telephone only

Protected by copyright. Copying for private or commercial purposes, in part or in whole, is not permitted unless authorised by AUDI AG. AUDI AG does not guarantee or accept any liability with respect to the correctness of information in this document. Copyright by AUDI AG.

ws	=	white
sw	=	black
ro	=	red
br	=	brown
gn	=	green
bl	=	blue
gr	=	grey
li	=	lilac
ge	=	yellow
or	=	orange
rs	=	pink

Speaker front

R	Radio
R21	Bass speaker, left front
R23	Bass speaker, right front
R26	Left Front Midrange Speaker
R27	Right Front Midrange Speaker
R70	Inside loudspeaker (Center Speaker)
T8a	8-Pin Connector, brown, radio connector II
T20	20-Pin Connector, black, door A-pillar, left
T20a	20-Pin Connector, black, door A-pillar, right
*	with Amplified Speaker only
**	with Passiv Speaker only

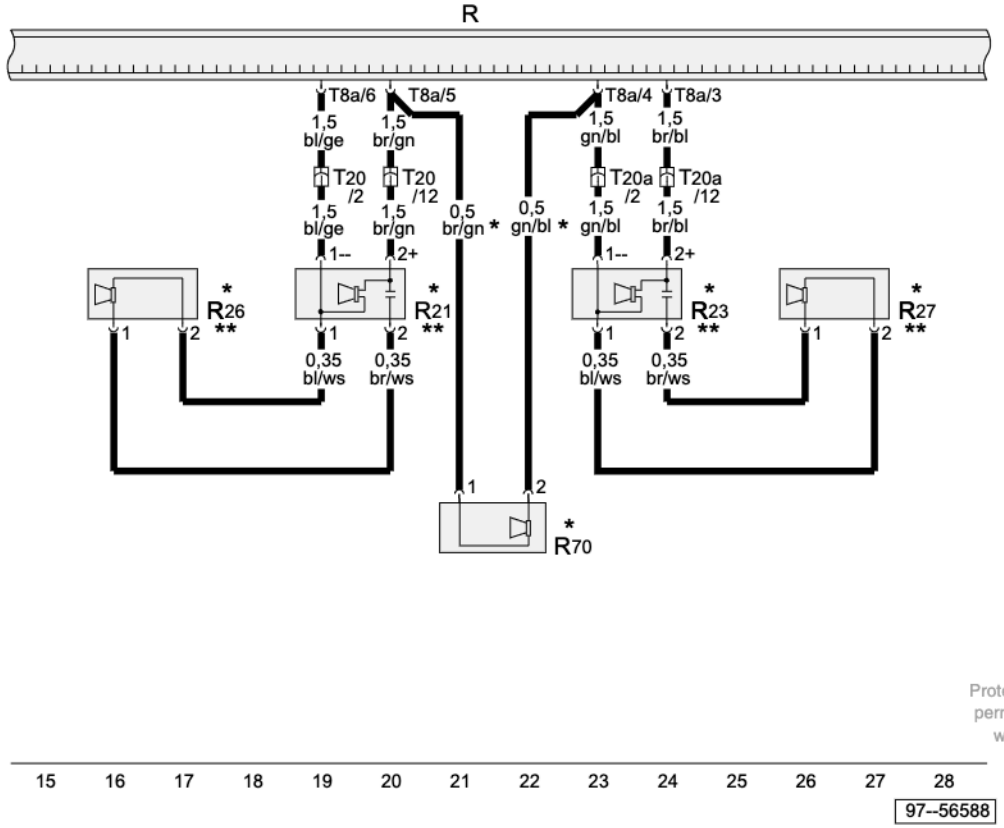

ws	=	white
sw	=	black
ro	=	red
br	=	brown
gn	=	green
bl	=	blue
gr	=	grey
li	=	lilac
ge	=	yellow
or	=	orange
rs	=	pink

Protected by copyright. Copying for private or commercial purposes, in part or in whole, is not permitted unless authorised by AUDI AG. AUDI AG does not guarantee or accept any liability with respect to the correctness of information in this document. Copyright by AUDI AG.

Speaker rear

R	Radio
R15	Bass speaker, left rear
R17	Bass speaker, right rear
R34	Left Rear Midrange Speaker
R35	Right Rear Midrange Speaker
T8a	8-Pin Connector, brown, radio connector II
T20b	20-Pin Connector, black, door B-pillar, left
T20c	20-Pin Connector, black, door B-pillar, right
*	with Passiv Speaker only

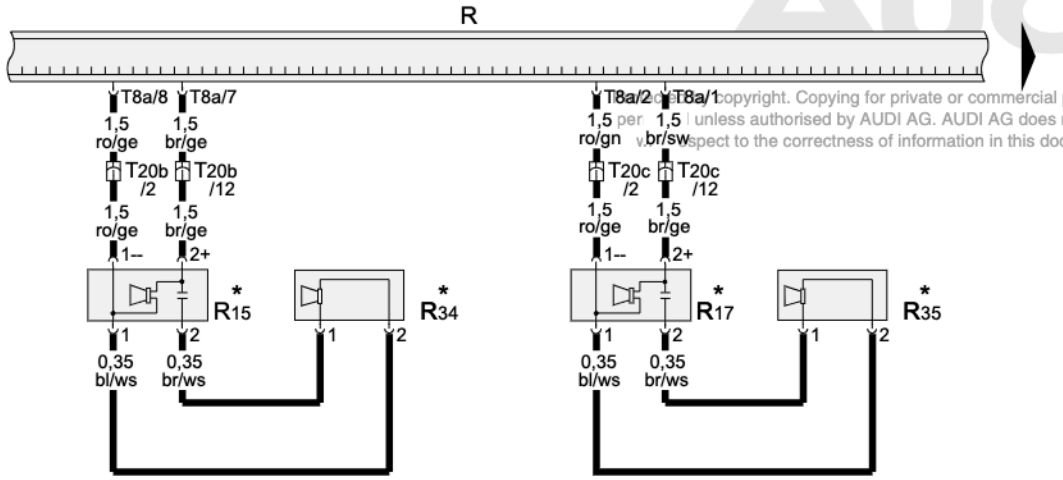

Copyright. Copying for private or commercial purposes, in part or in whole, is not permitted unless authorised by AUDI AG. AUDI AG does not guarantee or accept any liability with respect to the correctness of information in this document. Copyright by AUDI AG.

29 30 31 32 33 34 35 36 37 38 39 40 41 42

97--56589

ws	=	white
sw	=	black
ro	=	red
br	=	brown
gn	=	green
bl	=	blue
gr	=	grey
li	=	lilac
ge	=	yellow
or	=	orange
rs	=	pink

Amplified Speaker rear

R	Radio
R12	Amplifier
R15	Bass speaker, left rear
R17	Bass speaker, right rear
R34	Left Rear Midrange Speaker
R35	Right Rear Midrange Speaker
R100	Bass loudspeaker
T20b	20-Pin Connector, black, door B-pillar, left
T20c	20-Pin Connector, black, door B-pillar, right
T20d	20-Pin Connector, black, radio connector I
346	Ground connection (Audio), in instrument panel wiring harness
*	with Amplified Speaker only

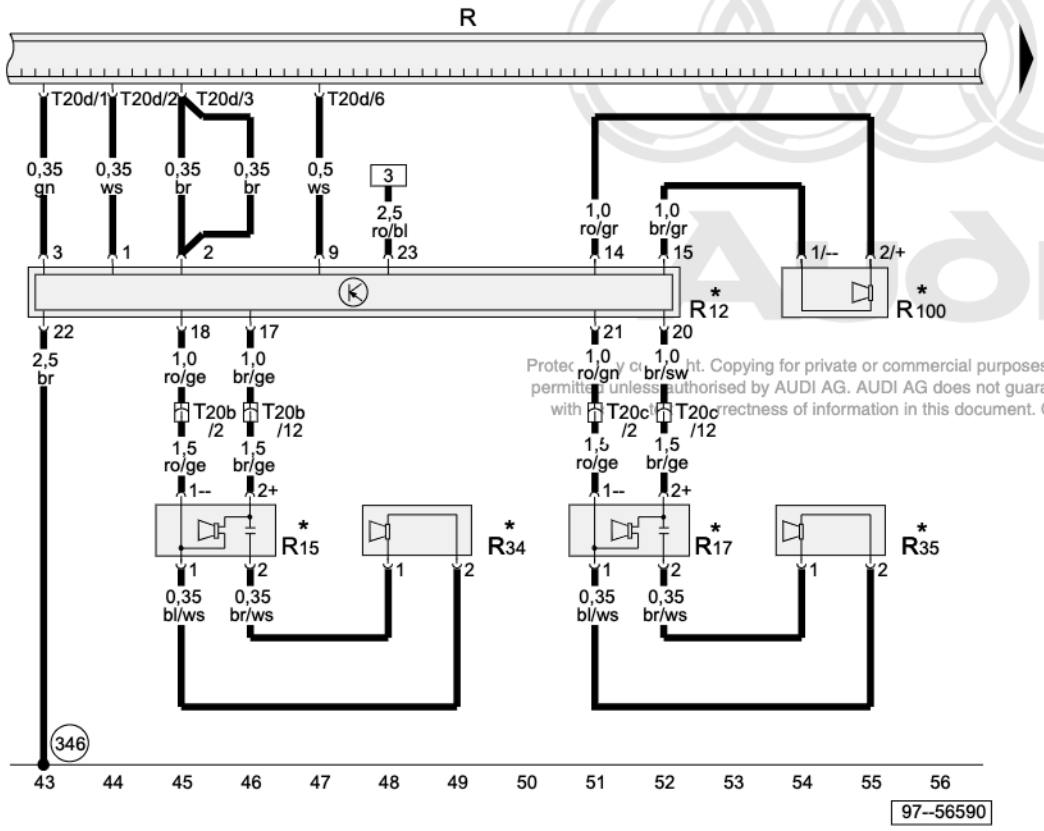

Protected by copyright. Copying for private or commercial purposes, in part or in whole, is not permitted unless authorised by AUDI AG. AUDI AG does not guarantee or accept any liability with respect to the correctness of information in this document. Copyright by AUDI AG.

ws	=	white
sw	=	black
ro	=	red
br	=	brown
gn	=	green
bl	=	blue
gr	=	grey
li	=	lilac
ge	=	yellow
or	=	orange
rs	=	pink

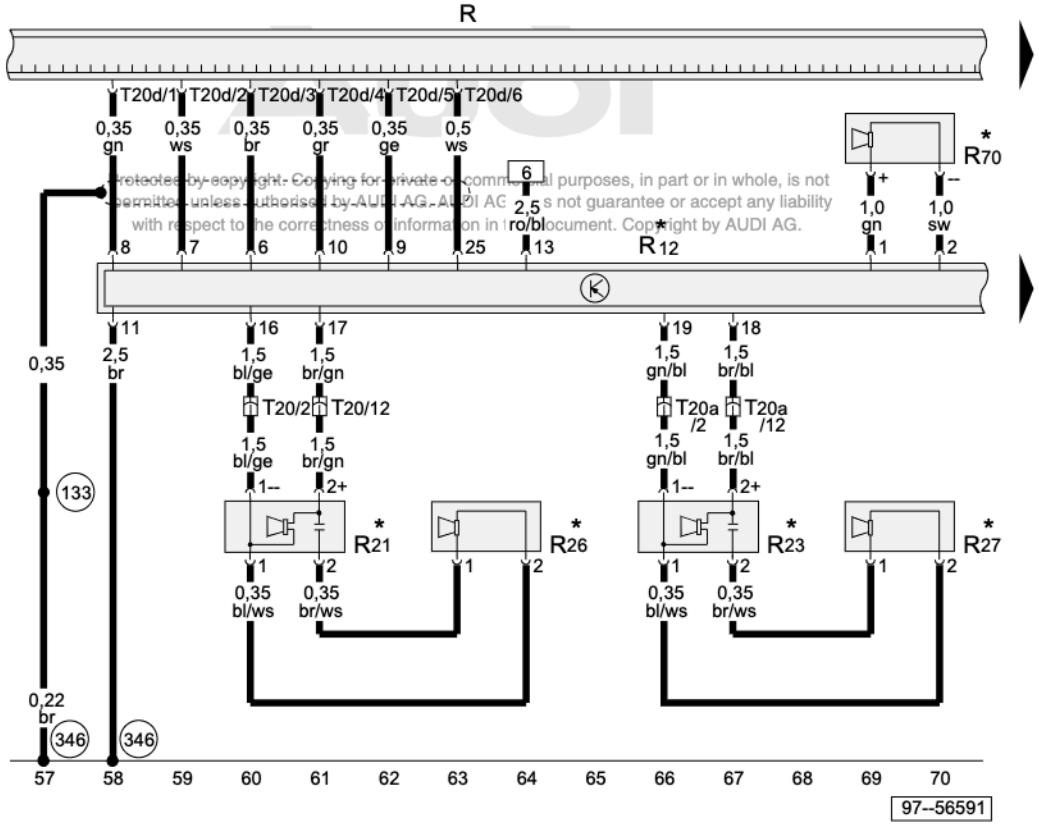

Protected by copyright. Copying for private or commercial purposes, in part or in whole, is not permitted unless authorised by AUDI AG. AUDI AG does not guarantee or accept any liability with respect to the correctness of information in this document. Copyright by AUDI AG.

Bose Speaker front

R	Radio
R12	Amplifier
R21	Bass speaker, left front
R23	Bass speaker, right front
R26	Left Front Midrange Speaker
R27	Right Front Midrange Speaker
R70	Inside loudspeaker (Center Speaker)
T20	20-Pin Connector, black, door A-pillar, left
T20a	20-Pin Connector, black, door A-pillar, right
T20d	20-Pin Connector, black, radio connector I
133	Ground connection, in speaker wiring harness
346	Ground connection (Audio), in instrument panel wiring harness
*	with Bose Speaker only

ws	=	white
sw	=	black
ro	=	red
br	=	brown
gn	=	green
bl	=	blue
gr	=	grey
li	=	lilac
ge	=	yellow
or	=	orange
rs	=	pink

Bose Speaker rear

R	Radio
R12	Amplifier
R15	Bass speaker, left rear
R17	Bass speaker, right rear
R34	Left Rear Midrange Speaker
R35	Right Rear Midrange Speaker
R100	Bass loudspeaker
T20b	20-Pin Connector, black, door B-pillar, left
T20c	20-Pin Connector, black, door B-pillar, right
*	with Bose Speaker only

Protected by copyright. Copying for private or commercial purposes, in part or in whole, is not permitted unless authorised by AUDI AG. AUDI AG does not guarantee or accept any liability with respect to the correctness of information in this document. Copyright by AUDI AG.

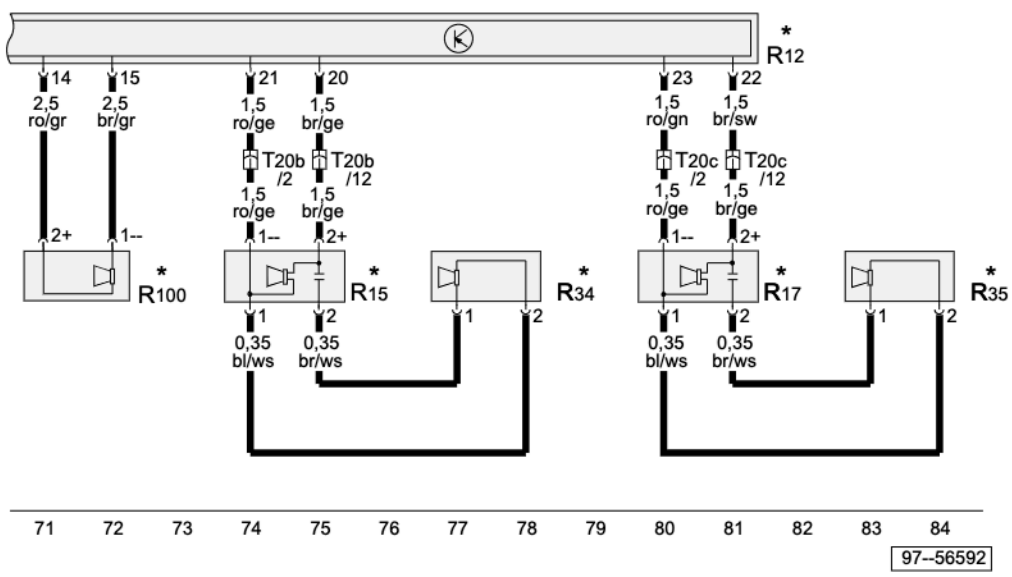

ws	=	white
sw	=	black
ro	=	red
br	=	brown
gn	=	green
bl	=	blue
gr	=	grey
li	=	lilac
ge	=	yellow
or	=	orange
rs	=	pink

CD Changer Unit

R	Radio
R41	CD Changer Unit
T20d	20-Pin Connector, black, radio connector I
309	Ground connection -1- (shielding) (in CD changer wiring harness)
310	Ground connection -2- (shielding) (in CD changer wiring harness)
V14	Wire connection (shielding), in CD-changer wiring harness
*	with CD-changer Unit only

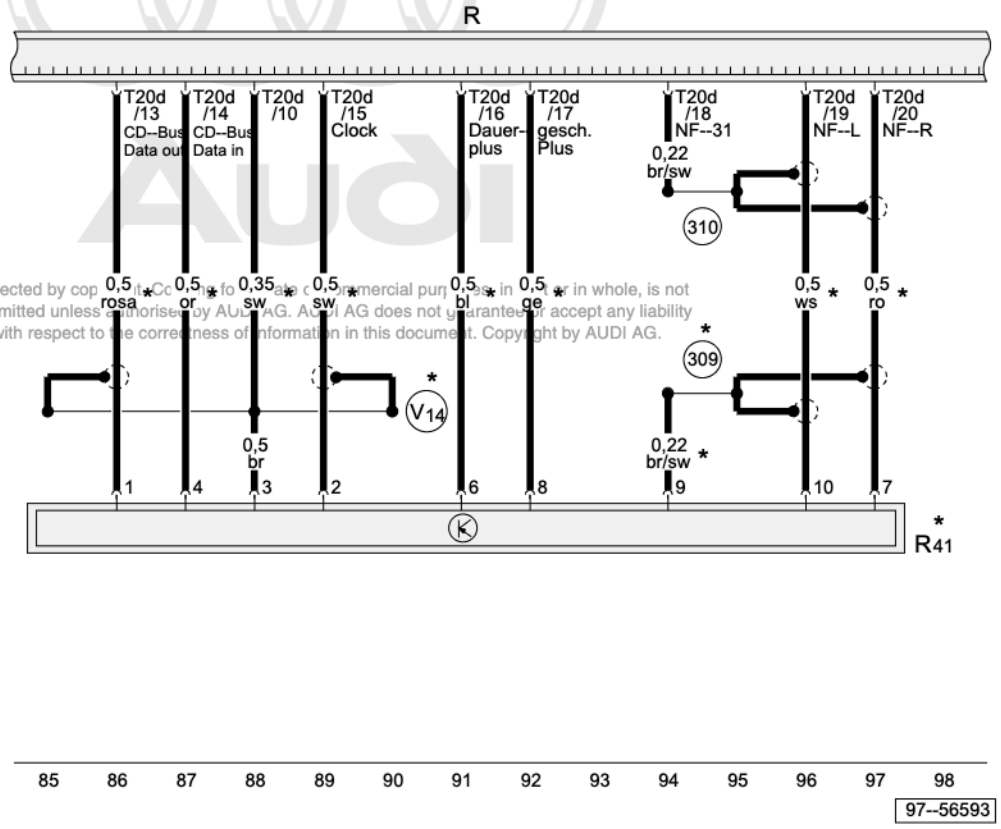

Protected by copyright. Copying for private or commercial purposes, in part or in whole, is not permitted unless authorised by AUDI AG. AUDI AG does not guarantee or accept any liability with respect to the correctness of information in this document. Copyright by AUDI AG.

ws	=	white
sw	=	black
ro	=	red
br	=	brown
gn	=	green
bl	=	blue
gr	=	grey
li	=	lilac
ge	=	yellow
or	=	orange
rs	=	pink

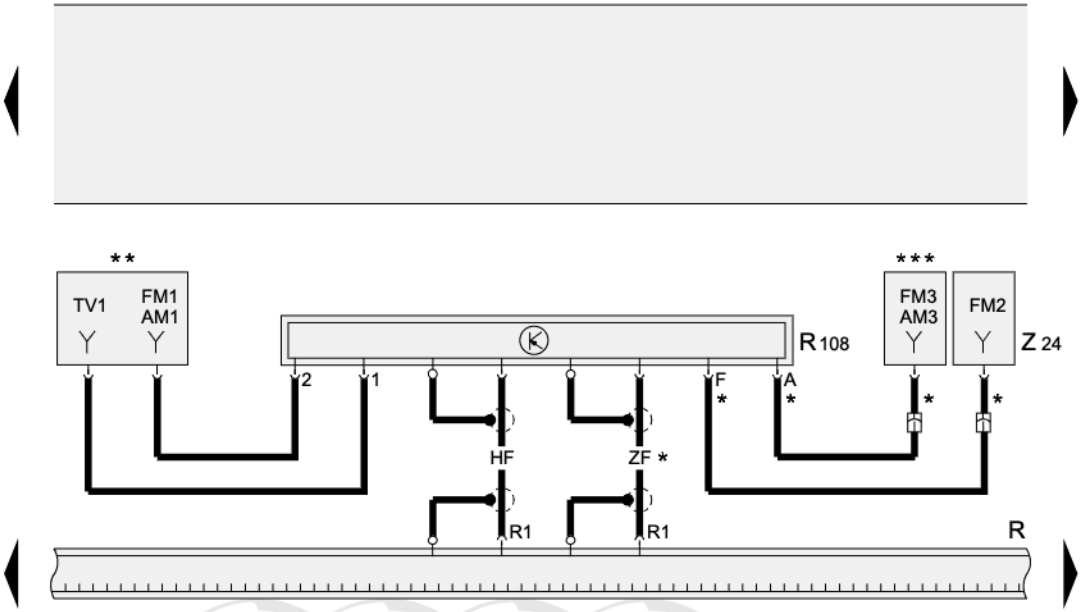

Antenna Avant

R	Radio
R1	Antenna Connection
R108	Left Antenna Module
Z24	Rear Window Defogger With Window Antenna
*	with Radio concert or symphony only
**	Antenna on window, left side rear
***	Antenna on window, right side rear

Protected by copyright. Copying for private or commercial purposes, in part or in whole, is not permitted unless authorised by AUDI AG. AUDI AG does not guarantee or accept any liability with respect to the correctness of information in this document. Copyright by AUDI AG.

ws	=	white
sw	=	black
ro	=	red
br	=	brown
gn	=	green
bl	=	blue
gr	=	grey
li	=	lilac
ge	=	yellow
or	=	orange
rs	=	pink

99 100 101 102 103 104 105 106 107 108 109 110 111 112

97--57421

Antenna Sedan, diagnostic connection, CAN-Bus

J285	Control module with indicator unit in instrument panel insert
R	Radio
R1	Antenna Connection
R11	Antenna
T8	8-Pin Connector, black, radio connector III
T16	16-Pin Connector, black, diagnostic connection
T20d	20-Pin Connector, black, radio connector I
T32	32-Pin Connector, blue, on instrument panel insert
A159	Wire connection (L), in instrument panel wiring harness
A178	Infotainment High-bus Connection (in instrument panel wiring harness)
A179	Infotainment Low-bus Connection (in instrument panel wiring harness)
*	Not for Radio chorus
**	Antenna for Sedan

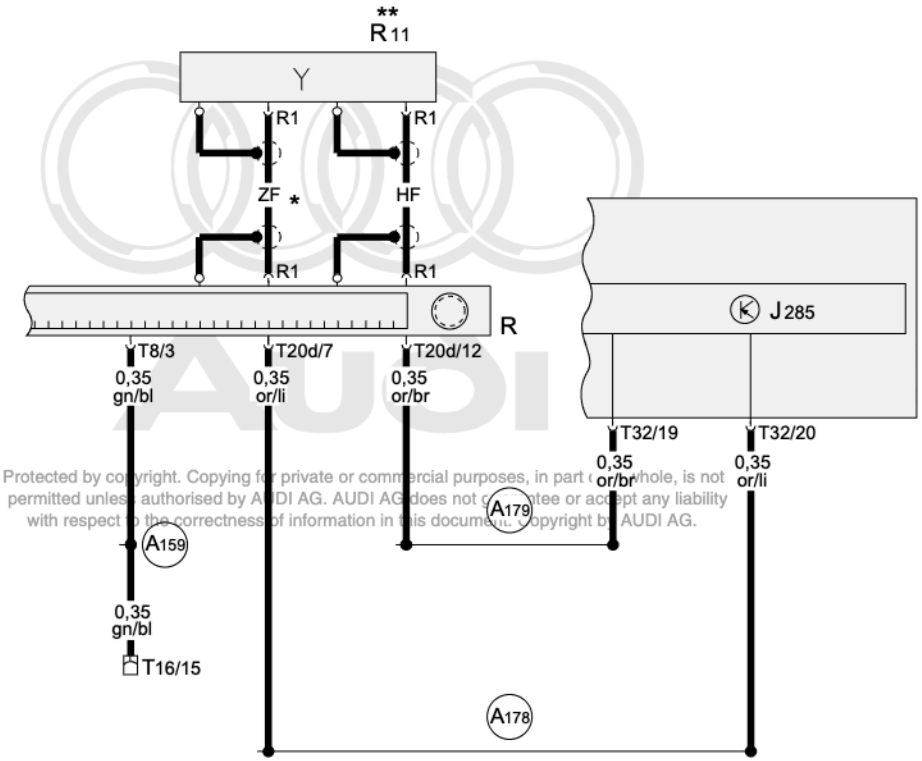

Protected by copyright. Copying for private or commercial purposes, in part or whole, is not permitted unless authorised by AUDI AG. AUDI AG does not guarantee or accept any liability with respect to the correctness of information in this document. Copyright by AUDI AG.

ws	=	white
sw	=	black
ro	=	red
br	=	brown
gn	=	green
bl	=	blue
gr	=	grey
li	=	lilac
ge	=	yellow
or	=	orange
rs	=	pink

113 114 115 116 117 118 119 120 121 122 123 124 125 126

97--56595